ENGINEER'S REPORT

Prepared For

Croton Overlook

Town of Yorktown

Westchester County, New York

September 2010

Prepared By

LAWRENCE J. PAGGI,PE,PC

Suite 205 Plaza 9

1070 Route 9

Fishkill, New York 12524

INTRODUCTION:

The project site is an approximately 62.7-acre parcel located on Saw Mill River Road and Dell Avenue in the Town of Yorktown. The proposed site development will include construction of 35 buildings, each containing two attached units (70 units total). The proposed improvements will include realignment of the existing Town road, construction of new water and sewer infrastructure, and a stormwater management system. The potable water will be supplied via connection to an existing municipal system located near the southwest corner of the property. Sewage disposal will be accomplished via a new collection, treatment and subsurface discharge system. The former use of the land in area of proposed development is predominantly wooded areas. This report addresses the proposed methods of potable water supply and sewage disposal to serve the new buildings.

SEWAGE DISPOSAL:

A gravity sewer main is proposed to be installed within the project site to collect sewage from the buildings. The laterals from the buildings to the sewer mains are proposed to be 4-inch diameter PVC. The mains shall be 8-inch diameter PVC. The sanitary sewage flow from ten (10) units located along a proposed cul-de-sac at the south end of the project cannot reach the wastewater treatment plant via gravity. Therefore, this flow will discharge to a proposed Sewage Pump Station to facilitate sewage transfer to the gravity collection at a proposed manhole located at the intersection of the proposed roadways. The sewage from this manhole will flow by gravity to the wastewater treatment facility located near the entrance to the proposed development. A proposed treated effluent pump station will discharge flow from wastewater treatment facility to the proposed absorption field via two force mains.

Design calculations:

Design Flow: 70 Units x 240 GPD/Unit = **16,800 GPD** (two-bedroom units are proposed).

Anticipated Average Daily Usage:

16,800 GPD/24 Hours of Daily Usage = 700 GPH
700 GPH/60 Minutes per Hour = **12GPM**

Soil exploration:

Deep test pits were performed in the area of absorption fields and 100% reserve areas.
Deep tests were performed by Lawrence J. Paggi PE, PC on June 16, 2010. Tests were witnessed by Westchester County Department of Health representative Frederick Beck. The results are attached to the Engineer's Report.

The percolation tests were performed by Lawrence J. Paggi, PE. PC., and witnessed by Westchester County Department of Health representatives Frederick Beck, Meray Ansah and Brian Kaley. Percolation test holes were presoaked on June 15, 2010 and tests were run on June 16, 2010. The results are attached to the Engineer's Report.

Design calculations for primary area:

The required primary absorption area to accommodate the Design Flow Rate in the available soils is calculated as follows:

Application Rate: 1.0 GPD/S.F. based upon a 6 to 7 minute percolation rate (refer to soil exploration section)

$$\textbf{Required Area} = \frac{\textbf{Design Rate}}{\textbf{Application Rate}} = \frac{\textbf{16,800 GPD}}{\textbf{1.0 GPD/S.F.}} = \textbf{16,800 S.F.}$$

Absorption Field: 20 Rows of 23 4'x 4' Flow Galley are proposed to accept the effluent from the site. The calculations below demonstrate the required absorption area.

Provided application area:

460 Galleys x 4 LF/Galley = 1840 LF x 8.67 SF/LF = 15,952 SF
40 Galleys with end sections x 26 SF/Section = 1040 SF
Total = 16,992 SF

The actual application rate is calculated as follows:

$$\frac{\text{16,800 Gallons per Day}}{\text{16,992 SF}} = \frac{\text{0.99 Gallons per Day}}{\text{Square Foot}}$$

Design calculations for replacement area:

The required replacement absorption area to accommodate the Design Flow Rate in the available soils is calculated as follows:

Application Rate: A 25% increase in application rate is allowed for subsurface disposal systems that receive discharge of treated effluent. This increase has been used only for the replacement area in this system. Based upon a 16 to 20 minute percolation rate (refer to soil exploration section) with this allowed 25% increase, the application rate is 0.7 GPD/S.F. x 1.25 = 0.875.

$$\textbf{Required Area} = \frac{\textbf{Design Rate}}{\textbf{Application Rate}} = \frac{\textbf{16,800 GPD}}{\textbf{0.875 GPD/S.F.}} = \textbf{19,200 S.F.}$$

Absorption Field: 22 Rows of 24 4'x 4' Flow Galley are proposed to accept the effluent from the site. The calculations below demonstrate how this field provides the required absorption area.

Provided application area:

528 Galleys 4 LF/Galley = 2112 LF x 8.67 SF/LF = 18311 SF
44 Galleys (end sections) x 26 SF/Section = 1144 SF
Total = 19,450 SF

The actual application rate is calculated as follows:

$$\frac{\text{16,800 Gallons per Day}}{\text{19,450 SF}} = \frac{\text{0.864 Gallons per Day}}{\text{Square Foot}}$$

BIOCLERE™ WASTEWATER TREATMENT SYSTEM DESIGN SPECIFICATIONS

A Bioclere treatment plant is proposed to treat the wastewater from the Croton Overlook development. The system will consist of the following components in series: A 20,000 gallon primary settling tank, a 5,000 gallon flow equalization tank, one model 36/24 Bioclere wastewater treatment unit, a 4,000 gallon phosphorus precipitation tank and tertiary sand filtration. The system will be capable of treating the daily design wastewater flow to achieve the permit effluent limits with the following maximum influent characteristics.

	Influent	**Effluent**
Design flow (gpd)	16,800	16,800
BOD5 (mg/l)	250	-
CBOD (mg/l)	-	<5
TSS (mg/l)	250	<10
TKN (mg/l)	45	-
Nitrate (mg/l)	-	<20
Total Phosphorus (mg/l)	8-12	< 1

PRIMARY TANK

Raw sewage will enter the proposed 20,000-gallon primary collection tank. The primary settling is proposed to be accomplished with a XERXES Fiberglass Tank. The primary tank is designed to separate solids from the liquid portion of the wastewater eliminating settleable and floatable solids from the waste stream. In doing so, it provides limited breakdown of organic matter, stores solids not broken down and separates grease and scum from the waste stream. The solids that settle to the bottom of the tank (sludge) must be periodically pumped out. Oils and grease that enter the primary settling tank and float to the top will form a scum layer that will also be pumped out.

The primary settling tanks will also receive approximately 60% of the design low from the recirculation pumps in the Bioclere unit. The sludge return from the settling and coagulation tank and sand filter backwash will be delivered to the primary tank as well. As a result, the primary settling tanks will also provide secondary solids storage as well as an anoxic zone for denitrification of nitrate that is returned from the Bioclere's aerobic treatment process.

PRE-EQUALIZATION

Primary settled wastewater is intended to flow by gravity to the pre-equalization tank (pre-EQ).

The approximate average flow rate to equalization tank was calculated as follows:
- influent to the plant = 16,800 GPD,
- recirculation from Bioclere = 9,600 GPD
- sludge discharge from settlement tank - 3 min/hr x 24 hr x 35 gpm = 2,520 GPD
- sand filter backwash – 3 min x 140 gpm/day = 420 GPD

Total flow to the primary settling tank = 29,340 GPD

The proposed equalization tank to be constructed using a 5,000-gallon XERXES Fiberglass Tank. This pre-EQ system is to consist of the 5,000 galon tank located ahead of the Bioclere unit and this tank will be equipped with two (2) Barnes SE411 effluent pumps, associated piping, valves, floats, slide rails, controls and appurtenances.

The two submersible effluent pumps will be set up in an alternating arrangement and will deliver primary settled wastewater to the Bioclere unit at a rate that should not exceed 35 gallons/minute. At 35 gallons per minute, the effluent pumps should be set to operate 7 minutes ON and 5 minutes OFF. Therefore, the maximum volume transferred per day was calculated as follows:
35 GPM x 1440 min/day x (7 min/12 min cycle) = 29,400 GPD.

Four control float switches are located in the tank and govern the following functions:

Low level Alarm float: The low level alarm float will act as a redundant pump shut off and will activate an audible and visual alarm signal when the float switch is in the extended position (open circuit).

Low level float: In the extended position this float switch will create an open circuit and prevent operation of the pumps. However, the pumps may be manually activated when the low level float switch is extended and the circuit is open. When the circuit is closed the float switch will activate the timer and alternate the Barnes SE pumps, transferring wastewater to the Bioclere unit.

Mid level float: A mid level float will create a closed circuit and activate the lag pump. Upon this occurrence, a counter will be triggered to alert the operator that a high level condition has occurred and that the timer setting may need adjusting.

High level float: The high level float switch will activate the audible and visual alarms when the circuit is closed.

IMPORTANT NOTES:

1) The EQ pumps will alternate between dosing cycles. However, if one pump fails the remaining pump will take over the failed pump's cycle and audible and visual alarms will be activated to indicate the failed pump condition. The visual alarm is to be equipped with a latching feature that will require manual reset to insure that proper attention is drawn to the alarm condition.

2) The Pre-EQ is designed to spread out the delivery of the total daily flow to the Bioclere unit over the course of 18 to 20 hrs. The pump timer settings are fully adjustable so that the operator can set the optimum dosing rate for the average daily flows.

BIOCLERE UNIT

One model 36/24 Bioclere will be provided to produce an effluent with quality of <30 mg/l BOD5 and <20 mg/l Nitrate. The Bioclere consists of a trickling filter that is situated over a hopper bottom clarifier (settling tank). The Bioclere is manufactured with fiberglass inner and outer skins with the cavity between filled with polyurethane foam insulation for temperature stabilization and maximum treatment efficiency.

As wastewater is generated it will be delivered to the primary settling tank, which will gravity flow into the pre-equalization tank. The pre-equalization tank will discharge via timed dose to the Bioclere. As mentioned earlier, the primary tank will provide secondary solids storage as well as an anoxic zone for denitrification of nitrate that is returned from the Bioclere's aerobic treatment process. Within the Bioclere, water flows by gravity to a center baffled chamber in the clarifier. Wastewater is supplied to the Bioclere trickling filter by means of two alternating stainless steel submersible pumps that are situated in the center baffle. In the event of a pump failure, the operational pump automatically takes over both dosing cycles. Dosing is controlled using fully adjustable timer and the wastewater is uniformly distributed over the entire surface area of the filter by means of fixed nozzles that are constructed of nylon. Each Bioclere contains a PVC dosing array and nozzles centered above the filter media to ensure uniform dosing (Fig # 1 & 2).

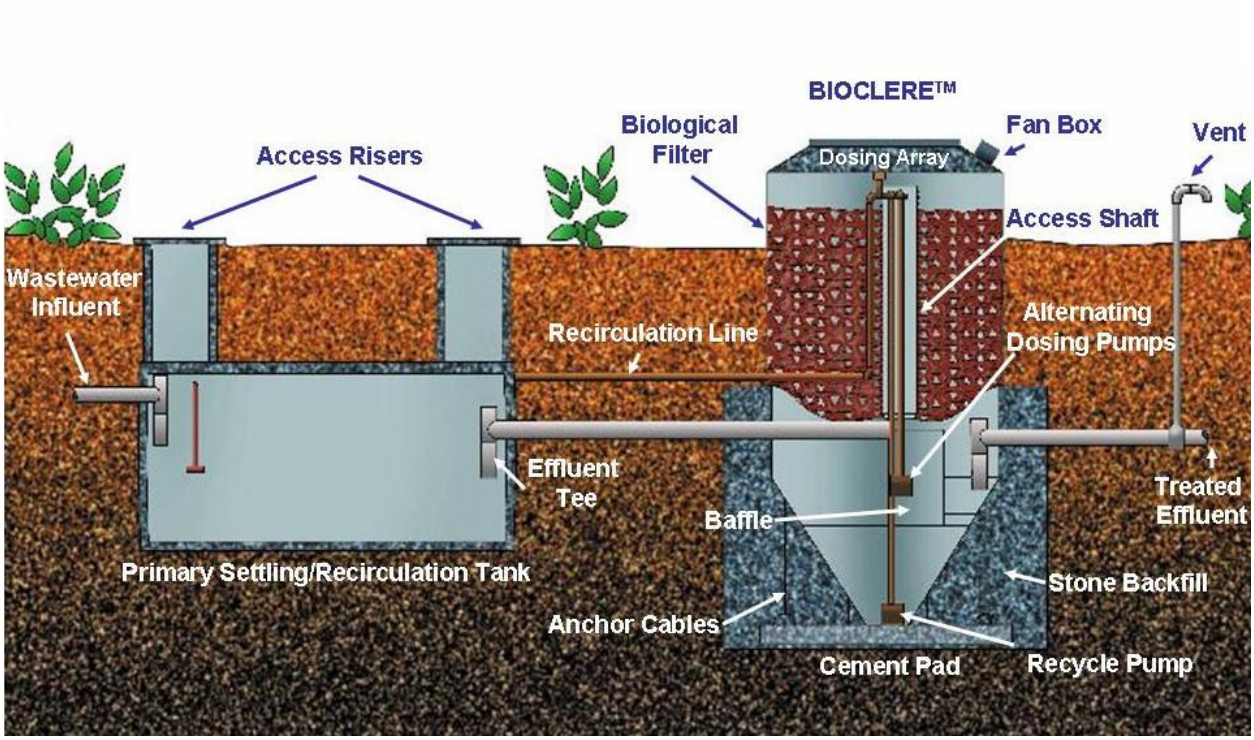

Figure # 1: Bioclere Schematic

Recirculation of sludge and wastewater is accomplished in the Bioclere unit using a submersible stainless steel pump controlled by fully adjustable timers. The pump is located on the bottom of the cone shaped clarifier. The diameter of the tank is 12 feet with 60-degree sloping sides. Internal baffling is provided in the clarifier to prevent short-circuiting of wastewater and biological solids. The biological solids generated in the trickling filter are returned to the primary tank at regular

intervals, typically every half hour or hour. In this case, the Bioclere recycle pumps will pump at an approximate rate of 50 gpm and the timers will be set to run 4 minutes per 30 minutes (+/- 200 gallons/half hr). This equates to approximately 9,600 gallons per day recycled (approximately 60% of design flow). Therefore, the sludge will not accumulate in the secondary clarifier and a sludge blanket will not form. The efficiency of the Bioclere secondary clarifier has been proven by the numerous installations and successful operating experience.

The benefits of recirculation are numerous and include: 1) removing biological sludge from the Bioclere so that only the primary tank needs periodic pumping, 2) diluting the influent pollutant concentrations which results in a thinner and more effective biofilm on the media bed, 3) odors are reduced in the primary tanks and the treatment components, 4) diluting biological inhibitors (cleaning agent, sanitizers, etc.) that may exist in the wastewater, 5) achieving nitrogen removal through denitrification due to the recirculation of nitrate to the recirculation tank.

The filter media consists of manufactured PVC randomly packed media. The media has a void ratio of >95%, is UV resistant and resistant to a wide range of aqueous solutions, acids, alkalis, oxidizing agents, oils, fats and alcohols (Fig # 3).

Fig # 2: Bioclere Dosing Array

Fig # 3: Randomly Packed PVC Media

Forced air ventilation is provided in the Bioclere since it is a covered trickling filter. The 36/24 Bioclere contains an axial fan with an airflow capacity of 240 cfm. The fan is exposed to the atmosphere due to its enclosure location on top of the Bioclere. Air flows subsequently through the filter, underdrain, and is discharged through the effluent pipe. A PVC vent is installed after each Bioclere.

Filter and clarifier sizing calculations

The media loading rates are based on over 13,000 municipal, commercial and industrial installations throughout the world and approximately 1,350 in the United States. The loading rates conform with those that are accepted by the United States Environmental Protection Agency (*Nitrogen Control* 1993 and *Assessment of Single Stage Trickling Filter Nitrification* 1991), Water

Environment Federation (Aerobic Fixed Film Reactors 2000) and Metcalf & Eddy, (Wastewater Engineering 1991).

The filter media organic loading rates are based on the design criteria outlined on page 1 of this document. The media in the Bioclere units will have a specific surface area of 140 m^2/m^3.

Bioclere Organic and Hydraulic Loading:

Organic Loading:
The organic loading to the Bioclere units takes into account an approximate BOD5 reduction to 200 mg/l (20%) through the primary tank. Assuming a recirculation rate of approximately 60%, the system will receive 30.54 lbs. BOD_5/day based on the design flow of 16,800 gpd

BOD5 (lbs./day) = Influent from primary tank + Recirculation

$$= \frac{(16{,}800 \text{ gpd} \times 8.34 \text{ (lbs./gal)} \times 200 \text{ (mg/l)})}{1\text{x}10^6} + \frac{(0.6*16{,}800 \text{ (gpd)})*8.34 \text{ (lbs./gal.)} *30\text{(mg/l)}}{1\text{x}10^6}$$

= **30.54 lbs. of BOD_5/day**

The model 36/24 Bioclere unit contains 24.0 m^3 of PVC media (865 ft^3). The specific surface area is 140 m^2/m^3 and the void ratio is >95%. Therefore, the media organic loading rate in the Bioclere will be:

= 30.54 lbs. BOD_5/day / (865 ft^3 media) = **0.035 lbs. BOD_5/ft^3-day (1.27 lbs. BOD_5/m^3-day)**

This loading rate will reduce the BOD_5 to <30 mg/l and oxidize approximately 40% of the influent ammonia (to <20 mg/l ammonia) (USEPA - Nitrogen Removal 1993 and Assessment of Single Stage Trickling Filter Nitrification 1991, Metcalf & Eddy 1991 and WEF Aerobic Fixed-Growth Reactors 2000).

Denitrification:

Denitrification in the Bioclere system is accomplished by periodically recycling secondary solids and treated (nitrified) effluent back to the septic tank or recirculation tank which provides an anoxic environment. Denitrification occurs by facultative microorganisms that are resident in and pumped to the recycle tank as secondary sludge. Recirculation occurs automatically for several minutes each hour and is controlled by an adjustable timer in the control panel. For typical residential strength wastewater, recirculation of treated effluent from the Bioclere to the septic tank is capable of achieving > 80% total nitrogen removal. The reason for this removal efficiency being that the weight ratios of carbon to TKN (measured as BOD:TKN) in the influent wastewater are usually greater than the generally accepted ratio of 3:1 (250 mg/l : 45 mg/l as presented above) in which denitrification has been proven to occur

without an external carbon source such as methanol. This level of treatment has been confirmed by Bioclere installations throughout the US as well as EPA, NSF and ETV studies that were performed at the Otis, MA air force base on Cape Cod (Data below in table #1). Note that the median and average effluent nitrate concentrations were 4.4 mg/l and 5.2 mg/l respectively. Furthermore, the data is skewed by higher nitrate values observed mostly during startup when the system was still developing a biomass.

Table # 1: Bioclere Nitrogen Data Summary (EPA/NSF study, Otis, MA)

	TKN (mg/L)		**Ammonia (mg/L)**		**Total Nitrogen (mg/L)**		**Nitrate (mg/L)**	**Nitrite (mg/L)**	**Temperature (ºC)**
	Influent	Effluent	Influent	Effluent	Influent	Effluent	Effluent	Effluent	Effluent
Samples	53	53	53	53	53	53	53	53	51
Average	37	10	23	6.2	37	16	5.2	0.45	15
Median	38	6.3	23	2.8	38	14	4.4	0.34	15
Maximum	46	35	27	22	46	36	14	1.5	23
Minimum	24	1.9	18	0.7	24	6.2	<0.1	0.07	7.4
Std. Dev.	4.4	10	2.1	7.0	4.4	8.4	3.5	0.26	4.9

Samples = Number of samples used in the calculations

Hydraulic loading:

The hydraulic loading calculations are detailed below:

Tank Diameter	12 feet
Surface Area	113 ft^2
Tank Volume	3500 gallons

Surface overflow rate (SOR):

SOR = Flow to clarifier (gpd) / Surface area of clarifier (ft^2)

SOR at average daily flow assuming a 24 hour flow distribution:
= (29,340 (gpd)/ 113 (ft^2) = **260 gal/day/ ft^2**

SOR at peak hourly flow:
Peak hourly flow = 35 gpm x 1,440 min/day = 50,400 gpd
50,400 gal/day / 113 (ft^2) = **446 gal/day/ft^2**

The recommended SOR for design average flow and peak flow is between 400-800 gal/day/ft^2 and 1000-1200 gal/day/ft^2 respectively (EPA and Metcalf & Eddy). Therefore, the SOR for the Bioclere clarifier is conservatively below the recommended ranges for design average and peak flow rates.

BIOCLERE CONTROL PANEL

The control components for the Bioclere units are to be housed in a single NEMA 4X fiberglass cabinet. All pumps and mechanical components are connected to audible and visual alarms to alert the operator in case of failure (based on high or low amperage draw). The control panel contains dry contacts for a common external alarm. Control panel installation shall be as per design drawings.

CHEMICAL PRECIPITATION for PHOSHPOROUS REMOVAL

Phosphorus (P) removal with metal salts, typically aluminum (alum or polyaluminum chloride) or iron (ferric chloride or ferric sulphate) is by far the most popular method used in the United States. Controls for this type of P removal are considered to be simple and straightforward (EPA - *Phosphorus Removal Manual 1987,* WEF – *Biological and Chemical Systems for Nutrient Removal 1998*). It consists of adding metal salts as coagulants that react with phosphates in the wastewater to form insoluble precipitates (metal phosphates and metal hydroxides). Dosing of coagulant is based on the stoichiometric metal salt to P ratio dictated by the concentration of P in the wastewater. Typically, 1.5-3 Moles of aluminum (Al^{+3}) or iron (Fe^{+3}) are required/Mole of P, and the efficiency of P-removal is related to the coagulant dose. Systems utilizing metal salt addition can effectively achieve 80-95 percent total P removal and effluent P concentrations less than 1.0 mg/L (EPA - *Phosphorus Removal 1987,* WEF – *Biological and Chemical Systems for Nutrient Removal 1998*).

Theoretically, the sludge produced is (2.9 mg solids/mg Al for alum) and (1.9 mg solids/mg Fe for ferric) WEF – *Biological and Chemical Systems for Nutrient Removal 1998.* Typical dosages of Al and Fe are approximately 15 mg:mg P. Assuming that the concentration of P in the aerobic effluent is approximately 5 mg/L, the sludge produced <u>at design flow</u> shall be approximately 21 lbs/day of dry sludge. This calculation assumes that the solids generation rate is 2 mg of solids/ mg of Metal coagulant used. This translates to approximately 100 gallons of sludge/day assuming a sludge concentration of 2.5% in the primary septic tank. Practical experience has shown that the overall sludge production at a treatment plant increases by approximately 25-30% when tertiary chemical phosphorus removal is employed.

After biological treatment in the Bioclere units, the wastewater shall undergo coagulation/flocculation and settling in a three compartment 4,000 gallon XERXES Fiberglass Tank. Chemical coagulation and flocculation shall be achieved in the first 1,333 gallon compartment using a 1/6 HP submersible aerator controlled via a fully adjustable timer. Coagulant shall be transferred to the coagulation/flocculation chamber using a chemical feed pump that shall be energized when either of the equalization pumps is energized. Settling of the metal and hydroxide flocs shall occur in the second compartment. A submersible sludge pump controlled using a fully adjustable timer shall be used in this middle chamber to return sludge to the primary settling tank. The final compartment is included for added settling efficiency. The hydraulic retention time in the flocculation and settling tanks shall be 1.9 hours and 3.8 hours at design flow respectively. The effluent shall discharge via gravity to a sand filter feed and backwash tank.

Phosphorous removal is proposed to be accomplished at this installation via poly-aluminum chloride injection into the coagulation/flocculation chamber. A PVC feed tube that passes through a coupling in the wall is provided for containing and feeding the poly-aluminum chloride solution feed through the PE tubing into the tank. PVC pipe is to be connected to the coupling in the wall. The Neptune chemical feed system consisting of 50 Gallon Chemical Solution Tank, metering pump and mechanical mixer will be used for poly-aluminum chloride injection.

Anticipated Average Daily Flow to coagulation/settling tank = 19,740 GPD

The required weight ratio of alum to phosphorous is theoretically 10:1, and will be field adjusted. Therefore a preliminary dosage setting is calculated as follows

Required dosage = 60 mg/l =
10 mg/L alum per 1 mg/l phosphorous x 6 mg/l phosphorous removal (anticipated)

A 10% poly-aluminum chloride solution may be employed as follows:

Req'd Alum Feed Rate = (19,740 gpd x 60 mg/l) / 10% =
= (19,740 gpd x 60 ppm) / 100,000 ppm = 11.8 gpd

Req'd pump setting was calculated as follows:

19,740 gpd / 35 gpm = 564 min/day
11.8 gpd / 564 min/day = 0.02 gpm =1.2 gph

Therefore, a 10% alum solution in the proposed 50 gallon crock, with a setting of approximately 1.2 gph would be appropriate with approximately four day supply of solution.

EFFLUENT SAND FILTRATION

Phosphorus precipitate tank effluent shall flow by gravity to a sand filter feed tank. The feed compartment and backwash compartment shall require a minimum liquid volume of 2,000 gallons each. The sand filter system shall incorporate (2) skid mounted, 36" diameter automatic backwash, high rate sand filters for effluent polishing. The sand filters shall be capable of reducing the remaining CBOD and TSS to the limits specified on page one of this document.

The sand media shall have a uniformity coefficient of 1.6. Each filter shall have a dedicated feed and backwash pump. Both filters shall have a surface area of 7 ft^2 and incorporate a feed rate not to exceed 15 gpm which translates to a filtration rate that will not exceed 2.5 gpm/ft^2. The feed piping shall contain a valve to throttle the filtration rate.

The filtration system shall consist of FRP (fiberglass) filament wound filter vessels, high efficiency

filtration media, system matched TEFC close coupled bronze fitted pump/motors, UL control panel, face piping, pressure gauges, control valves and actuators. All filtration system components shall be mounted on an epoxy coated carbon steel base.

The filter feed pump shall be energized by a float switch. If the feed pump fails, a high level float switch shall activate an alarm in the control panel. A pressure differential switch shall activate the backwash cycle when a pre set differential is realized. The backwash cycle consists of a simultaneous air scour and backwash pump cycle of time "t" which is controlled via an adjustable timer. The typical backwash cycle time shall be 3 minutes at 20 gpm/ft^2 (140 gpm).

ELECTRICAL DETAILS

The flow equalization equipment shall require a 115v/1ph/60Hz supply rated at 40 amps. The EQ contains duplex 0.4 HP submersible pumps and is controlled by (4) floats switches.

The Bioclere shall require a 230v/1ph/60hz supply rated at 40 amps. The unit contains a ventilation fan, two alternating (1 HP) dosing pumps, a (1 HP) sludge return pump, and a low level shut off switch.

Each sand filter shall require a separate 230v/1ph/60hz supply rated at 50 amps. Each sand filter will be fed by a 1.5 HP feed pump and backwash using a 3 HP pump.

The coagulant feed system controls shall require a 115v/1ph/60hz supply rated at 20 amps. The chemical feed unit consists of a 0.15 HP Neptune metering pump and a 0.25 HP mechanical mixer.

The Phosphorus precipitation mixing aerator and sludge pump equipment shall require a 115v/1ph/60hz supply rated at 30 amps.

OPERATION AND MAINTENANCE

The Bioclere unit is shipped with three Technical Manuals that cover in detail all installation, and operation and maintenance procedures for the Bioclere unit. A service report detailing the regular maintenance procedures is also included in the Manual. Onsite operator training with an Aquapoint field technician is generally provided the day of installation and/or commissioning.

PROCESS CONTROL

The facility owner shall contract with a reputable contract operator who is certified in NYS for the operation of activated sludge facilities. The minimum grade of operator shall be II-A. Process control adjustment shall be the responsibility of the certified operator based on routine testing of

the facilities process. Said testing can take place off sight at another facility or on sight, if on sight the following minimum equipment shall be provided:

a. Sink, disinfectant soap, paper towels and lab table
b. 2 – imhoff cones with brush & holders
c. centigrade thermometer
d. pH test kit
e. approved dissolved oxygen monitor
f. 1 liter graduated cylinder or settleometer
g. sample collector (dipper)
h. watch or timer
i. eye protection

SAFETY SUPPLY INVENTORY:

The contractor shall supply the facility with all required safety equipment as per OSHA requirements for facilities of this size and design, included shall be:

1. A first aid kit approved by all applicable regulatory agencies
2. Eye wash station
3. Rubber gloves
4. Goggles
5. Chemical wash down shower
6. Chemical/water proof apron
7. Any required spill containment devices for the required daily use chemicals stored on sight.

Note: The operations company shall provide additional safety equipment and a safety program to meet any and all regulatory requirements for the protection of their employees and any visitors to the sight. Such program shall include the MSDS program, color codes of specific chemicals and emergency procedures in the event of an emergency. This is not to be considered a complete inventory, items required to meet applicable regulations shall be the responsibility of the contractor.

WET WELL PUMP STATION

The flow from the ten (10) units located along the proposed cul-de-sac at the south end of the project will be collected by the series of sewer mains and flow by gravity to a proposed Sewage Pump Station located near the cul-de-sac. The flow from this sewage lift station will be pumped to the proposed manhole located at the intersection of the proposed roadways. The sewage from this manhole will flow by gravity to the wastewater treatment facility located near the entrance to the proposed development.

Design calculations:

Design Flow: 10 Units x 240 GPD/Unit = **2,400 GPD**

Anticipated Average Daily Usage:

2,400 GPD/24 Hours of Daily Usage = 100 GPH
100 GPH/60 Minutes per Hour = 1.7 GPM

Anticipated Peak Rate of Flow

4.2 x Average Daily Demand = 7.14 GPM

Pump Design:

The pumps at sewage pump station will be sized to evacuate the wet well at a rate of 32 GPM. The wet well will be designed to provide a volume between the liquid level (LL) "Off" setting and LL "On" setting of at least 1.5 times the design flow rate.

Head Loss:

Invert elevation of proposed manhole: 261.5

Elevation of intake of proposed pump station: 226.0

Elevation head loss: 261.5 – 226 = 35.5 feet

420 feet of 2-inch diameter force main are proposed.
To define the system head curve, the friction head loss in 2-inch pipe at flow rate of 32 GPM has been calculated for the required friction factors C=120 and C=150.

C=120

$H = (147.85 \times 32 / 120 \times 2^{2.63})^{1.852} = 30.8$ feet per 1000'

HF = 12.9 ft

HS = 35.5 ft

H_{ST} = 4.0 ft

TDH = 52.4 ft

C=150

$H = (147.85 \times 32 / 150 \times 2^{2.63})^{1.852} = 20.4$ feet per 1000'

HF = 8.6 ft

HS = 35.5 ft

H_{ST} = 4.0 ft

TDH = 48.1 ft

A Piranha S D 60 HZ pump will provide 68 feet of head @ 32 gpm (C=120).

Wet Well Design:

Proposed Wet Well: 42 inch diameter fiberglass.

Float Settings: Lead/Lag Pump Off – 12 inches above bottom of feed pump

Lead Pump On – 8.4 inches above pump off (equal to 50 gallons)

Lag Pump On – 6 inches above Lead Pump On

Alarm Level – 12 inches above Lag Pump On

Freeboard provided between Alarm Level and the invert elevation of the Inlet Pipe = 1.3' = 93.5 gallons.

The anticipated dose volume: 9.616 SF x 0.7 feet x 7.48 Gal./CF = 50 Gallons;

Provided storage: 9.616 SF x 1.3 feet x 7.48 Gal./CF = 93.5 Gallons.

The resulting velocity of 32 GPM in 2-inch force main is 3.3 fps.

- Conformance with DEC standards:

Maximum Design Flow:
3 x Average Daily Demand = **5.1 GPM**

Detention time of 9.8 minutes (50 gallons / 5.1 gpm = 9.8 min.) is expected, which is below maximum recommended 30 minutes of detention for the maximum design flow rate.

- Conformance with Ten State Standards:

Anticipated Average Daily Usage: 1.7 GPM

Detention time of 29.4 minutes (50 gallons / 1.7 gpm = 29.4 min.) is expected. Therefore, the filling time will not exceed recommended 30 minutes at the average design flow rate.

Alarms:

An adjustable mercury displacement switch shall be provided to sense a high water level condition. The switch shall hang into the wet well and shall activate a contact to indicate the high water condition. The alarm level floats shall activate an audible alarm and a light, which are to be located in a conspicuous location near the wet well. The controls shall include an automatic dialer to notify responsible parties in the event of an alarm.

FINAL EFFLUENT PUMP STATION

A 6 foot diameter precast concrete manhole will serve as a wet well for the final effluent pump station. Two Goulds WS2012 BHF submersible pumps will be used and will be mounted on slide rails for ease of maintenance. Each pump is to be connected to a 3-inch diameter force main that will carry the final effluent to the primary absorption field. The pump chamber will alternately dose each half of the proposed absorption field with 1000 Gallons via the proposed submersible pumps. A dose volume of 1000 Gallons represents approximately 1.2 times the line volume of the suspended pipes within the 920 linear feet (half of the proposed absorption field) of Galleys, plus the volume provided by the 3-inch diameter force main, which shall be allowed to drain back to the pump chamber.

The pump chamber shall be installed as an alternating duplex arrangement, with Goulds Model 3887BHF Series WS2012 BHF, single phase, 2 horsepower submersible sewage pumps, H-O-A controls, and high level alarm. The alarm shall be activated in case of power failure, pump failure, unauthorized entry, high level or other cause of pump station malfunction.

The float controls shall provide low level cut-out, high level activation of lag pump, and high level alarm as indicated by the floats settings depicted in the detail on the project plans.

The controls shall also automatically alternate the pumps with each consecutive cycle. The alarm shall be located in a conspicuous location.

The anticipated pump run time for primary area is calculated as follows:

Static Head = 56.5 feet
Friction Head = 10.5 feet at 51 gpm
Total dynamic head = 67 feet
Pump run time = 1000 gallons / 51 gpm = 19.6 min
Force Main Velocity: 51 gpm through 3 inch pipe = 2.3 fps

Proposed Dose Volume:

Line Volume of the suspended pipes (LF)	20 rows x 92 lf/row = 1840
Half of the Absorption Field (LF)	1840 / 2 = 920
Length of force main (LF)	700
Volume (CF)	$(2/12)^2$ x 3.14 x 920 +
	+ $(1.5/12)^2$ x 3.14 x 700 = 114.5
Volume (Gallons)	114.5 x 7.48 = 856
Dose Volume (Gallons)	1.17 x 856 = **1000**

In the event that the replacement absorption field is installed, the final effluent wet well shall be installed as an alternating duplex arrangement, with Goulds Model 3887BHF Series WS1512 BHF, single phase, 1.5 horsepower submersible sewage pumps. Each pump would still be connected to a 3-inch force main to carry the final effluent to the replacement absorption field. The pump chamber will alternately dose each half of the proposed absorption field with 1000 Gallons via proposed pumps inside the units. A dose volume of 1000 Gallons represents approximately 1.3 times the line volume of the suspended pipes within the 1056 linear feet (half of the proposed absorption field) of Galleys, plus the volume provided by the 3-inch diameter force main, which would be allowed to drain back to the pump chamber.

The anticipated pump run time for replacement area is calculated as follows:

Static Head = 48.5 feet
Friction Head = 6.5 feet at 51 gpm
Total dynamic head = 55 feet
Pump run time = 1000 gallons / 51 gpm = 19.6 min
Force Main Velocity: 51 gpm through 3 inch pipe = 2.3 fps

Proposed Dose Volume:

Line Volume of the suspended pipes (LF)	22 rows x 96 lf/row = 2112
Half of the Absorption Field (LF)	2112 / 2 = 1056
Length of force main (LF)	300
Volume (CF)	$(2/12)^2$ x 3.14 x 1056 +
	+ $(1.5/12)^2$ x 3.14 x 300 = 106.8
Volume (Gallons)	106.8 x 7.48 = 799
Dose Volume (Gallons)	1.25 x 799 = **1000**

Proposed Water Supply –

Currently the property is not located within a water supply district. The nearest water main is situated along NYS Route 100, at the intersection of Random Farms Drive, which lies adjacent to the south end of the project site. The existing water main is reported to be 8 inch diameter with a rated static pressure of approximately 180 pounds per inch. This water main is owned and maintained by the Town of New Castle.

A new Town of Yorktown Water Supply District must be created to connect with the Town of New Castle water supply system. The Town of Yorktown will own and maintain all water mains installed within the project development.

Westchester gov.com

Robert P. Astorino
County Executive

Cheryl Archbald, MD MPH
Acting Commissioner of Health

October 25, 2010

Croton Overlook Corporation
P. O. Box 1132
Yorktown Heights, NY 10598

Attention: Mr. TJ Muldoon

Re: Design Flow Confirmation
Croton Overlook Subdivision
Dell Avenue
Yorktown (T)
Section: 70.15; Block: 1; Lot: 1 & 2
Section: 70.11; Block: 1; Lot: 16

Dear Mr. Muldoon:

This Department has reviewed your engineer's preliminary submission regarding the proposed wastewater discharge for the above referenced project.

GENERAL

The proposed design flow of 16, 800 gallons per day (GPD) is acceptable based on NYSDEC standards. The project consists of:

70 Two-Bedroom Units with Design Flow = 21,000 GPD
Total Flow = 21,000 GPD
20% Reduction for Water Conservation Devices = (-4200) GPD
Total Design Flow = 16,800 GPD

SUB-SURFACE DISCHARGES

Based on our review on the site conditions and your submission, we believe that you have demonstrated that a disposal system can be constructed consistent with standards and should not contravene groundwater standards.

Department of Health
118 North Bedford Road, Suite 100
Mount Kisco, New York 10549

Telephone: (914) 864-7331
(914) 864-7333

Fax: (914) 864-7341

With all of these completed, you may proceed with the filing of a SPDES Permit application to the:

Regional Permit Administrator
NYS Department of Environmental Conservation Region III
21 South Putt Corners Road
New Paltz, NY 12561

Please include the following:

1. A completed application form "D" (original and one copy)
2. A completed Environmental Assessment Form (or other appropriate SEQR documentation)
3. Two (2) copies of a U.S.G.S. quadrangle map showing the properties boundaries.
4. Two (2) copies of this letter.
5. Two (2) copies of the site plan for the project identifying the discharge location and all other proposed site disturbances.

A copy of the SPDES application (Item 1) should be sent to this office at the time of submission to the Regional Permit Administrator.

Please recognize that the Department of Environmental Conservation may have additional submission requirement relating to other regulatory programs under which your project may fall. You may wish to contact the Division of Environmental Permits at (845) 256-3054.

Please note that the following issuance by N.Y.S.D.E.C., detailed plans and specifications shall be submitted to this office for review and approval. Construction of the sanitary facilities is prohibited prior to this approval. Should you have any questions concerning this matter, please feel free to contact this office. Thank you for your cooperation.

Very truly yours,

Lou Carrea, P.E.
Associate Engineer
Bureau of Environmental Quality

LC:fb

Cc: NYSDEC – Regional Permit Administrator
Lawrence Paggi, P.E., Lawrence J. Paggi, P.E., P.C.
Sharon Robinson, P.E., Town Engineer, Town of Yorktown
William Gregory, Building Inspector, Town of Yorktown
Delroy Taylor, P.E., WCDOH
File

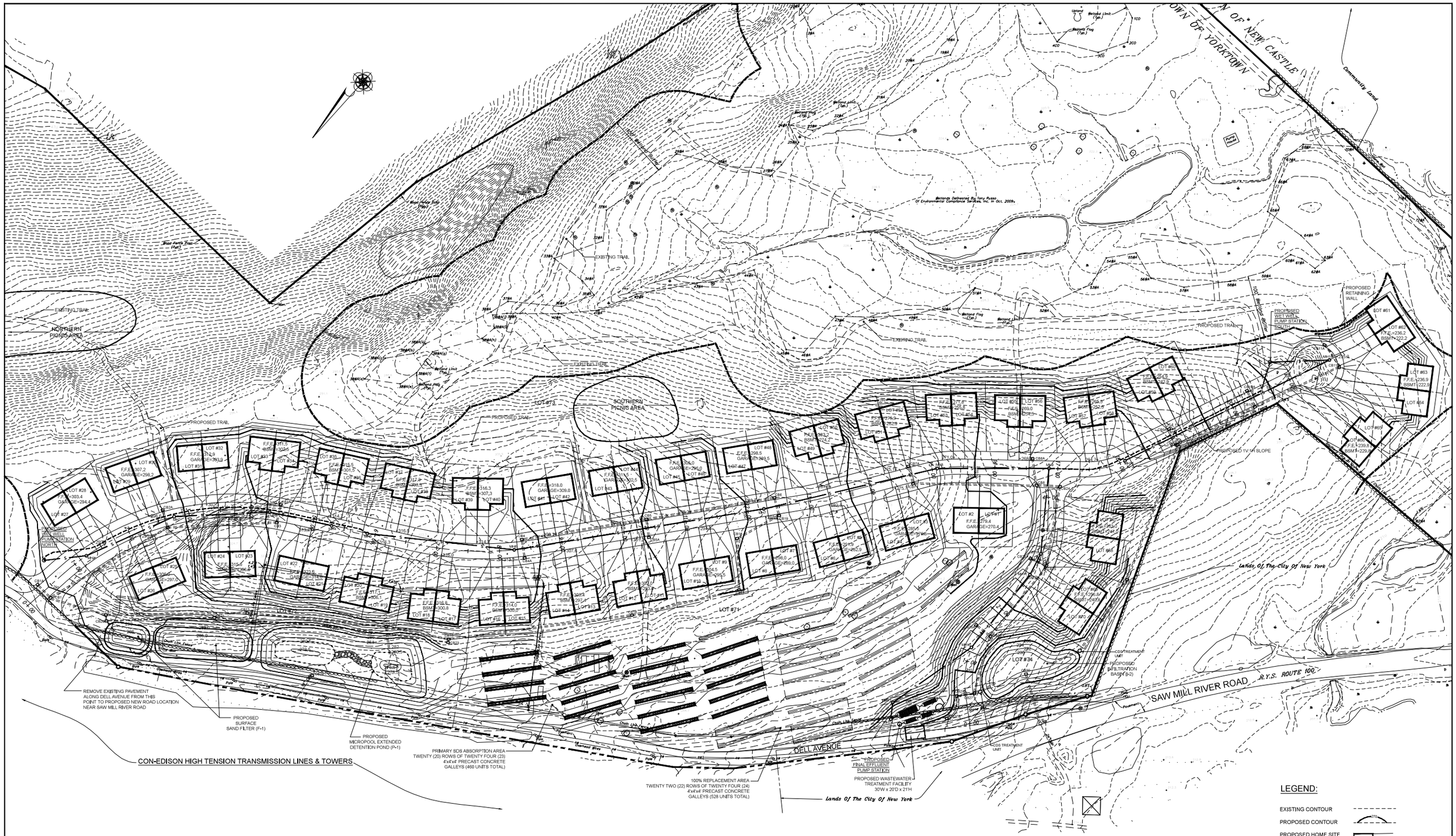

LEGEND:

- EXISTING CONTOUR
- PROPOSED CONTOUR
- PROPOSED HOME SITE & DRIVEWAY
- PROPOSED RETAINING WALL
- FEDERAL WETLAND BOUNDARY
- EXISTING STONE WALL
- EXISTING TREE LINE
- EXISTING WELL
- EXISTING CATCH BASIN AND CULVERT
- EXISTING UTILITY POLE
- EXISTING CHAIN LINK FENCE

LAWRENCE J. PAGGI, PE,PC
CONSULTING ENGINEERING
SUITE 205 PLAZA 9, 1070 U.S. ROUTE 9
FISHKILL, NEW YORK 12524
Civil, Sanitary & Site Engineering Site Planning Environmental Assessment

CROTON OVERLOOK

SAW MILL RIVER ROAD & DELL AVENUE
TOWN OF YORKTOWN, WESTCHESTER COUNTY, NEW YORK

GRADING PLAN

Revisions:

JOB NUMBER: 09-1111-15
DATE: SEPTEMBER 27, 2010
SCALE: 1" = 50'

SHEET # C2
2 OF 7

HISTORY OF RANDOM FARMS' SEWER TREATMENT FACILITY AND FIELDS AND CROTON OVERLOOK'S PROPOSED WASTEWATER TREATMENT SYSTEM

In the mid 1980s, prior to the adoption of the 1998 NYCDEP Watershed Regulation and the 2001 update of the Westchester County Health Department Sewer Regulations, Random Farms Associates Sewer Company, Inc. was granted a SPDES Permit to own and operate a Wastewater Facility to service the Random Farms Community.

Random Farms is a single family market rate development comprised of 103 3-4 bedroom homes, along with open/recreation space, a Wastewater Treatment Facility and its absorption fields.

From the mid 1980s, when construction began, until the late 1990s or early 2000s, when the last home was complete, Random Farms went thru many developers and builders. In some cases small builders would own 5 lots and in others, homeowners would buy their own lot and contract to have their home built. It can only be presumed that during this time, disclosure of the HOA's responsibility for the Wastewater Treatment Facility and fields and all that it entailed, was not high on the list of disclosure prior to the sale of homes. The lack of detailed disclosure has continued thru the subsequent re-sales of homes.

In light of the above, it is also highly unlikely that any of the developers or builders fulfilled their obligations to the HOA by paying the monthly HOA fees for the unsold units. This certainly negatively impacted the money needed for the operation, maintenance and eventual replacement of the Wastewater Treatment Facility.

SPDES Permits are renewed every 5 years. Random Farms' Permit was last renewed in 1994. Shortly after that, the Random Farms Associates Sewer Company became inactive. It does not appear that the HOA has formed a new Public Transportation Company as required. The HOA turned the operation of the facility over to their Management Company.

Sometime between 1994 and 1999, Random Farms' System went into failure. This was due to a combination of a daily flow in excess of their SPDES Permit and the failure of the absorption fields. The failure of the fields was due to the very tight, highly

compacted clay like soil combined with an extremely high ground water table. These conditions precluded the treated effluent from percolating down through the soils and instead pool on the surface, then finding its way into the Cornell Brook, where it proceeded across a portion of Croton Overlook's property. This was even worse during times of heavy rain.

In the early 2000s, the County Health Department, NYCDEP and the NYSDEC began monitoring Random Farms' Facility and fields. The problem only became worse over the years, culminating in an Order on Consent, executed on June 14, 2007 between Random Farms' HOA and NYSDEC. This Order on Consent required Random Farms to have the problem corrected by July of 2009. This did not happen. A new Order on Consent was entered into on August 31, 2009. This Order requires that the problem be fixed by July 2012.

With the exception of replacing all of the soil in the absorption fields, there are only two ways to fix Random Farms' problem. One, connect to a sewer line or two, allow the use of a surface discharge Wastewater Treatment Facility.

There are many reasons this problem has taken so long to fix. From early 2000 to early 2008 Random Farms was being told by New Castle, Westchester County and the City that their problem would be corrected by connecting to a County sewer line. The plan was for this diverted flow to go to Yonkers. Needless to say, during this time, the Random Farms' HOA did not take action to revise their budget to address the cost of a potential fix, because they were being told that they would be connected to a County sewer line and they would not be paying for it.

Unfortunately, sometime in early 2008, it became obvious that the County sewer diversion was not going to happen. Luckily for Random Farms, at the same time, the NYCDEP was proposing amendments to the Croton Reservoir Watershed Regulations. One of the amendments would allow for a community, in a hardship case, to build a new Facility that would treat to the appropriate standards and then surface discharge into a stream. Under the current Order on Consent, Random Farms was to have submitted plans for their proposed plant in September 2010. To date this has not been done. Once the plans have been approved and the Facility built, Random Farms will be discharging approximately 50,000 gallons of treated effluent into Cornell Brook and across Croton Overlooks property.

The history of Random Farms' problem is important in understanding why Croton Overlook will not have these problems.

First, Croton Overlook will be subject to the NYCDEP Watershed Regulations, as well as the most current County Health Department regulations and NYSDEC SPDES Permit requirements, which everyone can agree have become much more stringent.

Second, and most important, testing of the soils in Croton Overlook's absorption fields show the soil to be sand and loam to a full depth of 10 feet with no groundwater present, except for a small area at the top of the systems, which can be drained using a curtain drain. These soils are markedly superior for percolation than those in the Random Farms' absorption fields.

Proper disclosure of Croton Overlook's HOA responsibility for the Wastewater Facility and fields will be address in the Public Offering Statement, prepared for review and approval by the New York State's Attorney General's office. This responsibility will be included in the HOA's Master-Deed and By-Laws and will be incorporated into each lot's deed, to be sure re-sale owners are aware of this continuing responsibility.

The Wastewater Treatment Facility will be operated by a NYS licensed operator who will file monthly reports with both the Westchester County Health Department and the NYCDEP.

Budgets for operation, maintenance and replacement will be prepared by experienced operators and will be conservative and realistic. Croton Overlook has no expectation of tying into a County Sewer Line in the future.

Lastly, in the event that Croton Overlook's fields fail, the Community will be able to apply for a hardship variance, under the Amended Croton Reservoir Watershed Regulations and be able to surface discharge into Cornell Brook. Croton Overlooks' flow is projected to be 16.000 gallons, this is based on 2 people per bedroom. With only 2 adults living in the homes full time, it is expected that the flow will even be less. To facilitate a surface discharge, minor changes will be necessary to the Treatment System. For reference, the total cost of a new Treatment System would be approximately $300,000, and this cost will have been budgeted and certainly be affordable for the 70 homeowners.

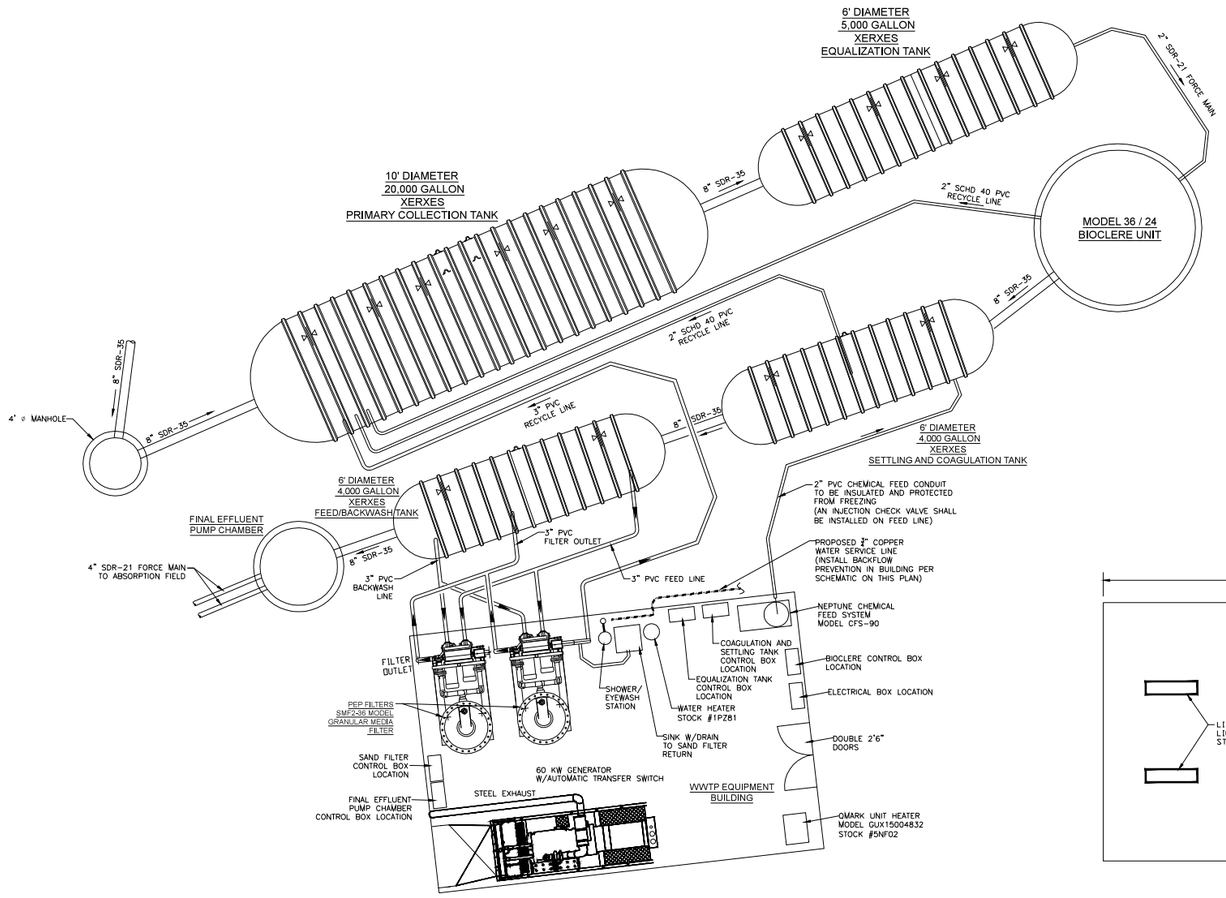

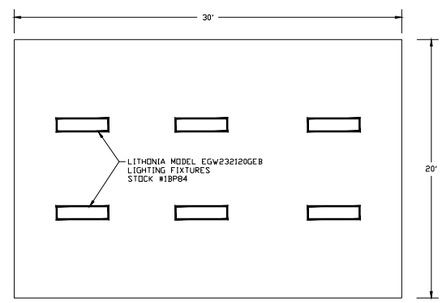

ROOF PLAN

THE PIPES IN THE SEWER PLANT BUILDING ARE TO BE IDENTIFIED AS FOLLOWS:

Raw Sludge Line	– Brown with Black Bands
Sludge Recirculation Suction Line	– Brown with Yellow Bands
Sludge Draw Off Line	– Brown with Orange Bands
Sludge Gas Line	– Orange (or Red)
Natural Gas Line	– Orange (or Red) with Black Bands
Nonpotable Water Line	– Blue with Black Bands
Potable Water Line	– Blue
Sewage (Wastewater) Line	– Gray
Water Lines for Heating Digesters or Buildings	– Blue with a 6 inch (150 mm) Red band spaced 30 inches (760mm) apart

All piping containing or transporting corrosive or hazardous chemicals shall be identified with labels every 10 feet (3 m) and with at least two labels in each room, closet, or pipe chase. Color-coding may also be used, but is not an adequate substitute for labeling.

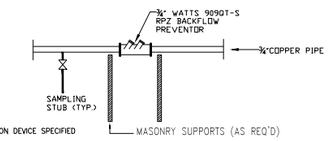

THE 3/4" BACKFLOW PREVENTION DEVICE SPECIFIED IS EQUIPPED WITH A STRAINER.

SPECIAL BACKFLOW PREVENTION DEVICE NOTES:

- THE RPZ SHALL BE INSTALLED IN THE MECHANICAL ROOM
- ALL ASSEMBLIES SHALL BE INSTALLED WITH A CENTERLINE HEIGHT FROM 30 INCHES TO 60 INCHES ABOVE THE FLOOR.
- ALL RPZ DEVICES MUST HAVE AN 18 INCH MINIMUM CLEARANCE BETWEEN THE BOTTOM OF THE RELIEF VALVE AND THE FLOOR TO PREVENT SUBMERSION AND PROVIDE ACCESS FOR SERVICING THE RELIEF VALVE.
- DISCHARGE FROM THE RELIEF VALVES MUST BE READILY DETECTABLE TO MAINTENANCE PERSONNEL EITHER VISUALLY OR BY MEANS OF WATER LEVEL ALARMS, FLOW INDICATOR LIGHTS, ETC.
- THE ENGINEERING CERTIFICATION OF CONSTRUCTION COMPLIANCE SHALL INCLUDE CERTIFICATION THAT NO CONNECTIONS TO THE NEW WATER SUPPLY EXIST BETWEEN THE TAP AT THE EXISTING MAIN AND THE NEW BACKFLOW PREVENTION DEVICES.
- WITHIN 30 DAYS OF THE INSTALLATION, A NYS DOH-1013 REPORT MUST BE COMPLETED AND SUBMITTED TO THE DUTCHESS COUNTY HEALTH DEPARTMENT
- THE BACKFLOW DEVICE MUST BE TESTED ANNUALLY BY A NYS CERTIFIED TESTER. A COPY OF THE INSPECTION AND TEST REPORT (DOH-1013) MUST BE SUBMITTED TO THE WESTCHESTER COUNTY HEALTH DEPARTMENT
- THE BACKFLOW DEVICE MUST BE DISASSEMBLED AND REBUILT EVERY 5 YEARS

SCHEMATIC OF BFP INSTALLATION
NOT TO SCALE

EMERGENCY POWER SIZING CALCULATIONS

BARNES PUMPS (EQUALIZATION TANK) – 0.4 HP x 2 = 0.8 HP = 597 W
PIRANHA PUMPS (WET WELL PUMP STATION) – 2.4 HP x 4 = 9.6 HP = 7162 W
GOULDS PUMPS (FINAL EFFLUENT PUMP STATION) – 2 HP x 2 = 4 HP = 2984 W

BIOCLERE:
DOSING PUMPS – 1 HP x 2 = 2 HP = 1492 W
SLUDGE RETURN PUMPS – 1 HP x 2 = 2 HP = 1492 W

SAND FILTER:
FEED PUMPS – 1.5 HP x 2 = 3 HP = 2238 W
BACKWASH PUMPS = 3 HP x 2 = 6 HP = 4476 W

NEPTUNE METERING PUMP – $\frac{1}{3}$ HP = 249 W
MECHANICAL MIXER – $\frac{1}{4}$ HP = 187 W

AERATOR – $\frac{1}{6}$ HP = 124 W
SLUDGE PUMP 1 HP = 746 W
LIGHTS 32W x 6 = 192 W
HEATER – 15 KW = 15000 W
WATER HEATER – 2000 W

TOTAL: 38939 W x 1.25 =48,674 W

THE GENERATOR SET INSIDE WWTP EQUIPMENT BUILDING SHALL BE MANUFACTURED BY CUMMINS-ONAN, MODEL GGHE 60 Hz, 3 PHASE (PROPANE – 60 KW)

NOTE: FUEL STORAGE TANK WILL BE PROVIDED ON SITE FOR EMERGENCY GENERATOR.

LAWRENCE J. PAGGI, PE,PC
CONSULTING ENGINEERING
SUITE 205 PLAZA 9, 1070 U.S. ROUTE 9
FISHKILL, NEW YORK 12524
Civil, Sanitary & Site Engineering
Site Planning
Environmental Assessment

CROTON OVERLOOK
SAW MILL RIVER ROAD & DELL AVENUE
TOWN OF YORKTOWN, WESTCHESTER COUNTY, NEW YORK
SEWAGE TREATMENT FACILITY DESIGN

Revisions:

JOB NUMBER: 09-1111-15
DATE: SEPTEMBER 27, 2010
SCALE: SCALE: 1"= 4'

SHEET #
C4
4 OF 7

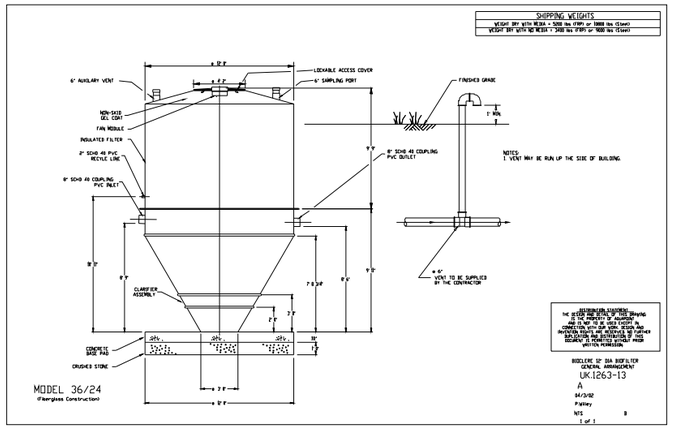

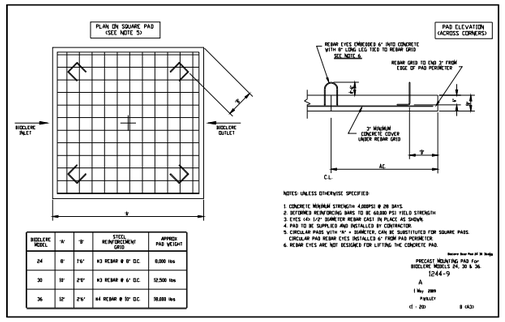

BIOCLERE MODEL	'W'	'D'	STEEL REINFORCEMENT GRID	APPROX PAD WEIGHT
24	8'	7'6"	#3 REBAR @ 8" O.C.	8,000 lbs
30	10'	2'6"	#3 REBAR @ 6" O.C.	12,500 lbs
36	12'	2'6"	#4 REBAR @ 30" O.C.	18,000 lbs

SECTION

BIOCLERE TREATMENT SYSTEM

PART 1 – GENERAL

1.01 SCOPE

A. The work of this section includes furnishing all labor, materials, tools and equipment necessary to furnish and install an AQUAPOINT factory built, Bioclere fixed film aerobic process type treatment system with all necessary equipment and appurtenances for efficient operation as specified herein and as shown on the drawings.
B. The manufacturer of the Bioclere process system shall be AQUAPOINT of New Bedford, MA.

1.02 DESIGN CRITERIA

A. The materials and equipment covered by this specification are intended to be standard materials and equipment of proven ability as manufactured by reputable concerns. Equipment shall be designed and constructed in accordance with the best practice of the industry and shall be installed in accordance with the manufacturer's recommendations and the Contract Documents.
B. The Bioclere system shall be designed to operate under the design criteria detailed in SECTION 2.01 (A).

1.03 PRODUCT HANDLING

A. All materials and equipment shall be shipped, stored, handled and installed in such a manner as not to degrade quality, serviceability or appearance. The Bioclere unit(s) shall be stored outdoors in a secured location according to the manufacturer's recommendations. Loose-shipped items shall be stored in a clean, dry location free from precipitation and excess moisture.

1.04 SUBMITTALS

A. Three complete sets of shop drawings and/or site specific Technical Manuals shall be submitted for all items to be furnished by AQUAPOINT. Submittals shall include all equipment and components, catalogue cuts, wiring diagrams, control schematics and all pertinent installation, operation and maintenance procedures to maintain efficient operation.

PART 2 – MATERIALS

2.01 BIOCLERE TREATMENT SYSTEM

A. General

1. The Bioclere treatment system shall include a trickling filter situated over a final settling tank. The Bioclere treatment system shall be delivered complete from the supplier and shall include: random packed PVC manufactured media, ventilation fan, dosing pump(s), sludge return pump, internal piping, wiring and controls for a complete operational treatment system. The trickling filter portion of the tank shall have fiberglass inner and outer skins with the cavity between filled with polyvinyl chloride foam insulation. The remainder of the unit shall be constructed of FRP or plastic as recommended by the equipment manufacturer. All internal piping shall be Schedule 40 PVC plastic pipe. The Bioclere unit shall withstand normal pressures from the interior hydrostatic load and from the soil. The design criteria are as follows:

Settled Influent Characteristics		Required Effluent
Flow, gpd	16,800	16,800
BOD5, mg/l	250	–
CBOD5, mg/l	–	<5
TSS, mg/l	250	<10
TKN, mg/l	45	–
Nitrate, mg/l	–	<20
Total phosphorus, mg/l	8–12	<1

B. Pre-Cast Mounting Pad

1. The contractor shall be responsible for providing a precast mounting pad upon which to set each Bioclere vessel. The mounting pads shall be as shown on the drawings.

C. Filter Media

1. The PVC randomly packed filter media shall have a void ratio of greater than 95 percent. The media shall be resistant to ultraviolet radiation and resistant to a wide range of aqueous solutions, acids, alkalis, oxidizing agents, oils, fats and alcohols.

D. Settling Tank

1. The settling tank shall be cone shaped and have 60 degree sloped sides to prevent the accumulation of biological and inorganic suspended solids and shall contain the necessary internal baffling to prohibit short-circuiting of the wastewater.

E. Ventilation Fan

1. The CSA approved ventilation fan shall be a 115v/1ph/60hz ball bearing fan with a minimum manufactured rated airflow rate of 240 cubic feet per minute. The fan shall have an aluminum housing and polycarbonate blade.

F. Pumps

1. The two alternating dosing pumps and one recycle pump shall be 200–230v/1ph/60hz stainless steel submersible pumps. All pumps shall have an internal high temperature shut off switch. Each pump shall be capable of 65 gpm at 21 ft. of head. Each pump shall be rated for intermittent or continuous duty when fully submerged between 0C–55C. The alternating dosing pumps shall be controlled such that when one pump fails the remaining will complete both dosing cycles.

G. Float Switches

1. The CSA and UL approved low level 115v/1ph/60hz float switch shall be installed to prevent the recycle pump from operating when water levels are abnormally low in the Bioclere (i.e. during primary tank pumping). The float switch shall be a mercury activated wide-angle switch.

H. Power Supply

1. Each Bioclere treatment unit shall have a dedicated 30 amp, 208v or 230v/1ph/60hz, power supply.

I. Control Panel

1. The UL approved control panel shall be furnished with an audio and visual alarm for pump failure and tripped circuit breaker conditions, an exterior alarm silence button, and an on/off/test power/alarm toggle switch. Within the NEMA 4X enclosed fiberglass panel pump timers, relays, terminal strip, on/off/test switches, run lights, dosing pump alternator, circuit breakers and current sensors shall be provided. A dry contact shall be installed in each control panel so that a common Bioclere alarm may be wired to a convenient location.

J. Wiring

1. The electrical contractor shall complete the wiring between the Bioclere control panel and the terminal strip within the Bioclere fan module meeting all local, state, and federal codes.
2. All fittings, connections, etc. shall be weatherproof and water tight construction. Ground terminals are provided in both the main panel and the junction box for each unit. Each ground terminal shall be wired to an earth ground.
3. Care shall be taken to match the wires between the control panel and the terminal strip within the Bioclere fan module located on each unit.

K. Warranty

1. All equipment provided shall be warranted against defects in materials and workmanship for a period of one year from the date of installation.

L. Spare Parts

1. A recommended list of spare parts shall be detailed in the site specific Technical Manual that details the installation, Operation & Maintenance procedures.

M. Services Provided

1. AQUAPOINT or an approved manufacturer's representative shall provide the following services for each project. The general contractor shall install the Bioclere unit(s) and all related components.

a. Provide onsite technical assistance for the handling and positioning of the Bioclere unit(s) the day of installation.
b. Return to the site for testing and/or commissioning of the Bioclere unit(s) upon substantial completion of site work by the general contractor (backfill, piping, electrical, grading, etc.). AQUAPOINT shall install the randomly packed PVC media and pumps into the Bioclere unit(s). A&T shall be available to train the operator(s) and instruct the owner on Bioclere operation the day of testing/commissioning.
c. Remain accessible to the owner and/or operator for phone consultation.
d. Be available on a contract basis for additional site visits or consultation.

PART 3 – EXECUTION

3.01 INSTALLATION

A. All materials and equipment shall be installed in a neat, workmanlike manner.
B. Installation of the Bioclere treatment system and ancillary equipment supplied by AQUAPOINT shall be in accordance with written instructions provided by the manufacturer or approved representative.
C. The Bioclere and all applicable treatment units supplied by AQUAPOINT shall be installed with sufficient ballast to offset buoyant forces due to induced or high groundwater conditions.

3.02 CLEAN UP

A. Prior to start-up and field-testing, all foreign matter shall be removed from the grease trap(s), septic tank(s), pump station(s) and Bioclere unit(s).

3.03 FIELD TESTING
A. The Bioclere treatment system shall be field-tested using clean fresh water prior to acceptance. The system shall be operated to test the efficiency of all components. All systems, controls, and sequences shall be operated and demonstrated as operating as approved. The contractor shall perform all tests and shall be responsible for all necessary temporary connections, testing equipment and utilities and shall provide and dispose (if necessary) of all water used. A factory trained representative shall be present for the testing.

3.04 PROHIBITIONS

A. Organic solvents, fuel oils, paints and thinners, photographic fluids, floor waxes and strippers, solutions containing copper compounds, cleaning agents containing quaternary ammonium chlorides and products containing compounds that are documented to inhibit biological growth should not be discharged to the sewage treatment system.

TO: Design Engineers
RE: Bioclere System Design Checklist

The following is a checklist for the design of an onsite wastewater treatment system that includes a 12 foot diameter Bioclere – Model 36/24.

NOTE: The following details should be shown on the site plan to facilitate installation.

* Bioclere unit must be installed on a contractor supplied concrete mounting pad (see dwg. 1244-9). The pad should be installed on 12 inches of crushed stone.

* The recycle line is a 2.0" diameter PVC coupling originating over the Bioclere inlet (dwg. PMW/1256-7).

* Inlet and outlet on the Bioclere unit(s) are 8" diameter PVC Schedule 40 couplings located 180 degrees apart. Any changes in direction between tanks should be made with pipefittings.

* A 6" diameter PVC vent must be installed after each Bioclere (dwg. LK.1265-8).

* Volume of concrete to be poured around the base of the Bioclere must be specified on the site plan if the unit(s) is installed in groundwater (see appropriate clarifier displacement curve). The concrete must extend 4 feet above the top of the mounting pad. If the high groundwater table will extend above the Bioclere flange, please notify AQUAPOINT prior to manufacturing the unit(s).

* Provide 4 feet of backfill (minimum) above the recycle line outlet on the Bioclere. Backfill to grade must be clean sand or pea stone.

* OSHA requires that a safety rail/ladder or service platform is required for tanks that extend >4 feet above grade. If necessary, Aquapoint can supply a safety rail and ladder system. However, it is most cost effective to provide an earth berm around the Bioclere so that <4 feet extends above grade. If berm is used, provide 3 feet level area for operator to access top of Bioclere.

* If necessary provide provisions for sampling the septic tank effluent and/or the effluent D-box/final pump chamber.

* Each Bioclere unit requires a dedicated 30 Amp, (230V/60 Hertz/1 phase) power feed.

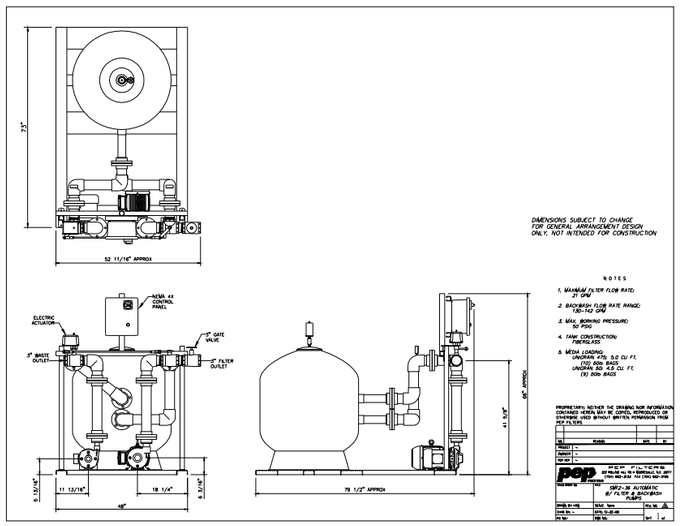

1.1 FILTRATION SYSTEM

A. General

1. Provide a high efficiency media filtration system. The filtration system shall operate continuously to remove suspended particulate from the condenser water. The filtration system shall backwash automatically upon reaching a 16 psig differential pressure set-point across the media bed or after 24 hours, whichever occurs first. A manual pushbutton switch shall also activate the automatic backwash cycle.

2. Filtration system shall be sized for 5% side-stream flow or 16 system volume turns per day, whichever is greater. Filtration flux rate shall not exceed 20 gpm/ft2. To assure that all filtered solids are removed during backwash, backwash flux rate shall not be less than 15 gpm/ft2 for two minutes.

3. Filtration system shall be as manufactured by Process Efficiency Products (PEP Filters) or approved equal.

B. Equipment

1. The filtration system shall consist of a filter vessel, high efficiency filtration media, system matched pump with close coupled motor, pump pre-strainer with removable stainless steel strainer basket, UL control panel, face piping, pressure gauges, control valves and actuators. All filtration system components shall be mounted on an epoxy coated carbon steel base.

2. Filtration system shall be assembled and tested at the factory prior to shipment.

3. Filter Vessel and Vessel Components

a. The filter vessel shall be fabricated of fiberglass reinforced plastic. The vessel shall be rated for 50 psig maximum operating pressure. Filter vessel shall have suitably sized inlet and outlet connections, drain connection, access ports and vent fittings. Internal over and under-drain shall be of PVC construction.
b. The filter vessel shall include both automatic and manual air vents.
c. For vessels 20" through 30" diameter, the filter vessel shall be compression molded FRP. For vessels 36" through 48" diameter, the filter vessel shall be filament wound FRP.

4. Face Piping
a. Filter vessel face piping shall be schedule 80 PVC.
b. Face piping shall allow for field configuration of either system or city water backwash.
c. Optional – The filter shall incorporate a water/chemical conservation mode. The filter shall automatically select source or city water for backwash depending on system conductivity. If conductivity is low, city water shall be selected. If high, the filter shall automatically select system water for backwash. The filter shall also be equipped with a suitable interface for selection of backwash water source via the building monitoring system.

5. Valves
a. Valves shall be ball type with bronze body and corrosion resistant steel alloy ball with Teflon seat.
b. To eliminate water hammer potential and "out of sequence" operation, the control valves shall be mechanically linked.

6. Actuator(s)
a. Motorized type electric actuators shall be utilized to cycle 3-way ball valves between filter and backwash modes.
b. Actuators shall be oversized for 150% over torque requirement for long life and dependability.

7. Pump/Motor
a. Filtration system shall include a system-matched TEFC close-coupled bronze fitted pump/motor. The pump shall be rated for 150 psig maximum operating pressure and sized for the rated filter flow at 20 gpm/ft2 at 50 ft. TDH. If sweeper jet nozzles are utilized on the filter discharge, the pump shall be sized at 70 ft. TDH to compensate for the additional pressure drop. The pump shall include a cast iron body pre- strainer with removable stainless steel basket.

8. Control Panel
a. The control panel shall be UL listed.
b. All electrical components shall be housed in a lockable NEMA 4X enclosure.
c. A lockable main disconnect switch shall be mounted on the enclosure door.
d. The control panel shall include a differential pressure switch to automatically cycle the backwash.
e. Panel shall have pump motor overload protection.
f. Panel shall include step-down transformer.
g. Panel and pump motor shall be factory pre-wired for single point connection to power source.

9. Skid
a. The filtration system shall be mounted on a C4 channel 304 stainless steel base.

10. Filter Media:
a. Media shall be permanent type, rechargeable by backwashing at a flow rate no less than 15 gpm/ft2 for two minutes. Filter manufacturer shall supply all required media. Media shall meet AWWA or NFS standards.
b. The standard media pack shall be rated to remove suspended particulate down to 10 microns. High efficiency media pack shall remove particulate down to 0.5 micron. Provide [standard or high efficiency media pack].

LAWRENCE J. PAGGI, PE,PC
CONSULTING ENGINEERING
Civil, Sanitary & Site Engineering Site Planning Environmental Assessment
SUITE 205 PLAZA 9, 1070 U.S. ROUTE 9
FISHKILL, NEW YORK 12524

CROTON OVERLOOK
SAW MILL RIVER ROAD & DELL AVENUE
TOWN OF YORKTOWN, WESTCHESTER COUNTY, NEW YORK
SEWAGE TREATMENT FACILITY DETAILS

Revisions:

JOB NUMBER: 09-1111-15
DATE: SEPTEMBER 27, 2010
SCALE: NOTED

SHEET #
C5
5 OF 7

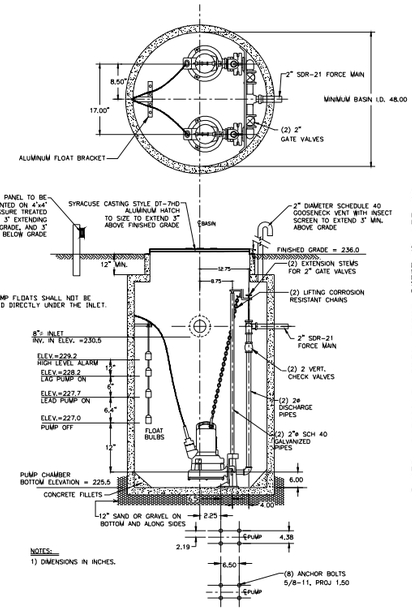

NOTES:
1) DIMENSIONS IN INCHES.

WET WELL PUMP STATION SOUTH
NOT TO SCALE

ALL PENETRATIONS TO TANK SHALL BE WATERTIGHT

PROVISIONS SHALL BE MADE AS NECESSARY TO EXTEND SLIDE RAILS BRACKETS TO SECURE TO TANK SIDE WALLS AND/OR TANK BOTTOM

ALL ELECTRICAL WORK SHALL COMPLY WITH THE NATIONAL ELECTRIC CODE.

NO ELECTRICAL JUNCTION BOXES ARE PERMITTED WITHIN THE PUMP CHAMBER. THE PUMPS AND FLOATS SHALL BE INSTALLED WITH LEADERS SUFFICIENTLY LONG TO ALLOW WIRING CONNECTIONS OUTSIDE OF THE TANK.

PRECAST CONCRETE PUMP CHAMBER AND HATCH SHALL BE SUITABLE FOR H-20 LOADING. PUMP CHAMBER SHALL BE CAST WITH PIPE BOOTS AND MANHOLE OPENING TO ACCOMMODATE THE REQUIREMENTS INDICATED ON THIS DETAIL.

A FIRE UNDERWRITERS CERTIFICATE OF ELECTRICAL COMPLIANCE FOR THE PUMP STATION MUST BE SUBMITTED WITH THE ENGINEER'S CERTIFICATION OF CONSTRUCTION COMPLIANCE.

DUAL ALTERNATING PIRANHA S20/2D, 2.4 HP SUBMERSIBLE SEWAGE GRINDER PUMPS SHALL BE INSTALLED AS SHOWN. THE FLOATS SHALL BE SET SO TO ACHIEVE A DOSE VOLUME OF 50 GALLONS.
DUPLEX SUMP CONTROLS SHALL BE PROVIDED AND SHALL INCLUDE H-O-A CONTROLS AND A HIGH LEVEL ALARM.
THE CONTROLS AND A VISIBLE AND AUDIBLE ALARM SHOULD BE MOUNTED ON 4" x 4" POST LOCATED NEAR PUMP CHAMBER.

THE ALARM SHALL BE ACTIVATED IN CASES OF POWER FAILURE, PUMP FAILURE, UNAUTHORIZED ENTRY, HIGH LEVEL OR OTHER CAUSE OF PUMP STATION MALFUNCTION.

USE 4'⌀ PRECAST CONCRETE MANHOLE FOR PUMP CHAMBER.

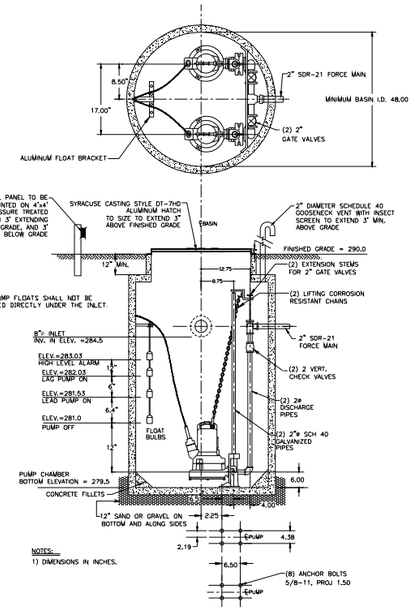

NOTES:
1) DIMENSIONS IN INCHES.

WET WELL PUMP STATION NORTH
NOT TO SCALE

ALL PENETRATIONS TO TANK SHALL BE WATERTIGHT

PROVISIONS SHALL BE MADE AS NECESSARY TO EXTEND SLIDE RAILS BRACKETS TO SECURE TO TANK SIDE WALLS AND/OR TANK BOTTOM

ALL ELECTRICAL WORK SHALL COMPLY WITH THE NATIONAL ELECTRIC CODE.

NO ELECTRICAL JUNCTION BOXES ARE PERMITTED WITHIN THE PUMP CHAMBER. THE PUMPS AND FLOATS SHALL BE INSTALLED WITH LEADERS SUFFICIENTLY LONG TO ALLOW WIRING CONNECTIONS OUTSIDE OF THE TANK.

PRECAST CONCRETE PUMP CHAMBER AND HATCH SHALL BE SUITABLE FOR H-20 LOADING. PUMP CHAMBER SHALL BE CAST WITH PIPE BOOTS AND MANHOLE OPENING TO ACCOMMODATE THE REQUIREMENTS INDICATED ON THIS DETAIL.

A FIRE UNDERWRITERS CERTIFICATE OF ELECTRICAL COMPLIANCE FOR THE PUMP STATION MUST BE SUBMITTED WITH THE ENGINEER'S CERTIFICATION OF CONSTRUCTION COMPLIANCE.

DUAL ALTERNATING PIRANHA S20/2D, 2.4 HP SUBMERSIBLE SEWAGE GRINDER PUMPS SHALL BE INSTALLED AS SHOWN. THE FLOATS SHALL BE SET SO TO ACHIEVE A DOSE VOLUME OF 50 GALLONS.
DUPLEX SUMP CONTROLS SHALL BE PROVIDED AND SHALL INCLUDE H-O-A CONTROLS AND A HIGH LEVEL ALARM. IN THE EVENT OF HIGH LEVEL ALARM THE LAG SHALL BE AUTOMATICALLY ACTIVATED. THE CONTROLS AND A VISIBLE AND AUDIBLE ALARM SHOULD BE MOUNTED ON 4" x 4" POST LOCATED NEAR PUMP CHAMBER.

THE ALARM SHALL BE ACTIVATED IN CASES OF POWER FAILURE, PUMP FAILURE, UNAUTHORIZED ENTRY, HIGH LEVEL OR OTHER CAUSE OF PUMP STATION MALFUNCTION.

USE 4'⌀ PRECAST CONCRETE MANHOLE FOR PUMP CHAMBER.

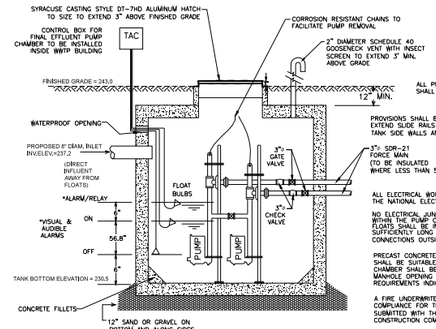

CROSS SECTION VIEW

FINAL EFFLUENT PUMP CHAMBER DETAIL
NOT TO SCALE

ALL PENETRATIONS TO TANK SHALL BE WATERTIGHT

PROVISIONS SHALL BE MADE AS NECESSARY TO EXTEND SLIDE RAILS BRACKETS TO SECURE TO TANK SIDE WALLS AND/OR TANK BOTTOM

3"⌀ SDR-21 FORCE MAIN (TO BE INSULATED WHERE LESS THAN 5' DEEP)

ALL ELECTRICAL WORK SHALL COMPLY WITH THE NATIONAL ELECTRIC CODE.

NO ELECTRICAL JUNCTION BOXES ARE PERMITTED WITHIN THE PUMP CHAMBER. THE PUMPS AND FLOATS SHALL BE INSTALLED WITH LEADERS SUFFICIENTLY LONG TO ALLOW WIRING CONNECTIONS OUTSIDE OF THE TANK.

PRECAST CONCRETE PUMP CHAMBER AND HATCH SHALL BE SUITABLE FOR H-20 LOADING. PUMP CHAMBER SHALL BE CAST WITH PIPE BOOTS AND MANHOLE OPENING TO ACCOMMODATE THE REQUIREMENTS INDICATED ON THIS DETAIL.

A FIRE UNDERWRITERS CERTIFICATE OF ELECTRICAL COMPLIANCE FOR THE PUMP STATION MUST BE SUBMITTED WITH THE ENGINEER'S CERTIFICATION OF CONSTRUCTION COMPLIANCE.

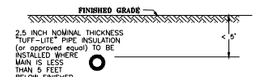

INSULATION DETAIL
NOT TO SCALE

DUAL ALTERNATING SUBMERSIBLE SEWAGE PUMPS (GOULDS MODEL 3887BHF WS2012BHF, 2 HORSEPOWER) SHALL BE INSTALLED AS SHOWN. THE FLOATS SHALL BE SET SO TO ACHIEVE A REQUIRED DOSE VOLUME OF 1000 GALLONS. AUTOMATED CONTROL SYSTEMS DUPLEX SUMP CONTROLS SHALL BE PROVIDED AND SHALL INCLUDE H-O-A CONTROLS AND HIGH LEVEL ALARM. IN THE EVENT OF HIGH LEVEL ALARM THE LAG PUMP SHALL BE AUTOMATICALLY ACTIVATED. A VISIBLE AND AUDIBLE ALARM SHALL BE LOCATED IN A CONSPICUOUS LOCATION. THE PUMP CHAMBER ALARM WILL BE LOCATED IN THE WASTEWATER TREATMENT PLANT EQUIPMENT BUILDING.

THE ALARM SHALL BE ACTIVATED IN CASES OF POWER FAILURE, PUMP FAILURE, UNAUTHORIZED ENTRY, HIGH LEVEL OR OTHER CAUSE OF PUMP STATION MALFUNCTION.

USE 6'⌀ PRECAST CONCRETE MANHOLE FOR PUMP CHAMBER TANK.

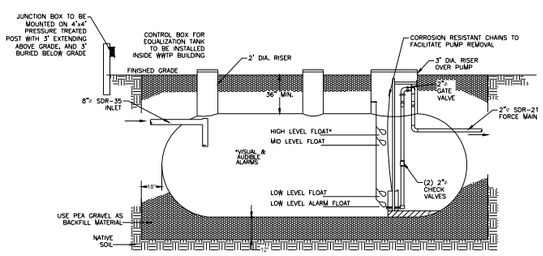

CROSS SECTION VIEW

FLOAT SWITCH ELEVATION SETTINGS

1) LOW LEVEL ALARM FLOAT SWITCH (OPEN)
6 INCHES BELOW THE LOW FLOAT (LEAD/LAG PUMPS OFF)
2) LOW FLOAT SWITCH (OPEN)
3 TO 6 INCHES ABOVE TOP OF FEED PUMPS (LEAD PUMP ON)
3) MID LEVEL FLOAT SWITCH (CLOSED)
12 INCHES BELOW INLET TEE INVERT (LAG PUMP ON)
4) HIGH LEVEL FLOAT SWITCH (CLOSED)
6 INCHES BELOW INLET TEE INVERT (ALARM LEVEL)

NO ELECTRICAL JUNCTION BOXES ARE PERMITTED WITHIN THE TANK. THE PUMPS AND FLOATS SHALL BE INSTALLED WITH LEADERS SUFFICIENTLY LONG TO ALLOW WIRING CONNECTIONS OUTSIDE OF THE TANK.

FIBERGLASS TANK AND LID SHALL BE SUITABLE FOR H-20 LOADING.

DUAL ALTERNATING BARNES SUBMERSIBLE SEWAGE GRINDER PUMPS, 0.4 HORSEPOWER, SHALL BE INSTALLED AS SHOWN.
DUPLEX SUMP CONTROLS SHALL BE PROVIDED AND SHALL INCLUDE H-O-A CONTROLS AND A HIGH LEVEL ALARM.
A VISIBLE AND AUDIBLE ALARM SHALL BE LOCATED IN A CONSPICUOUS LOCATION. THE PUMP CHAMBER CONTROLS AND ALARM WILL BE LOCATED IN THE WASTEWATER TREATMENT PLANT EQUIPMENT BUILDING.

THE ALARM SHALL BE ACTIVATED IN CASES OF POWER FAILURE, PUMP FAILURE, UNAUTHORIZED ENTRY, HIGH LEVEL OR OTHER CAUSE OF PUMP STATION MALFUNCTION.

USE XERXES FIBERGLASS 6'⌀ 5000 GALLON TANK FOR EQUALIZATION TANK.

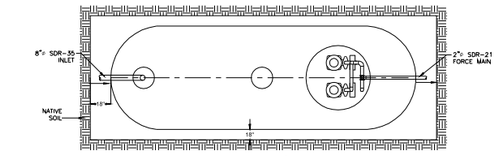

PLAN VIEW

EQUALIZATION TANK DETAIL
NOT TO SCALE

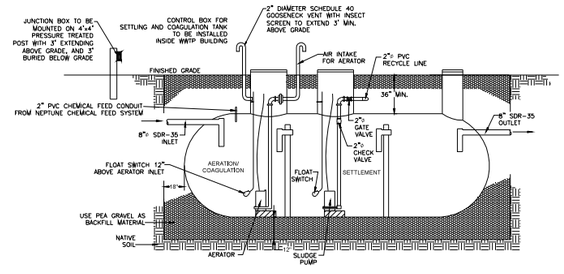

CROSS SECTION VIEW

NO ELECTRICAL JUNCTION BOXES ARE PERMITTED WITHIN THE TANK. THE PUMPS AND FLOATS SHALL BE INSTALLED WITH LEADERS SUFFICIENTLY LONG TO ALLOW WIRING CONNECTIONS OUTSIDE OF THE TANK.

FIBERGLASS TANK AND LID SHALL BE SUITABLE FOR H-20 LOADING.

USE XERXES FIBERGLASS 6'⌀ 4000 GALLON TANK FOR SETTLING/COAGULATION TANK.

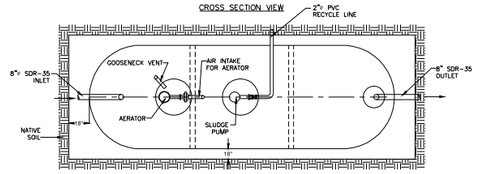

PLAN VIEW

SETTLING AND COAGULATION TANK DETAIL
NOT TO SCALE

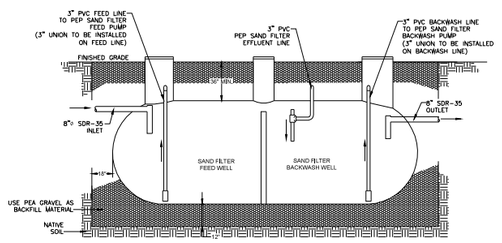

CROSS SECTION VIEW

FIBERGLASS TANK AND LID SHALL BE SUITABLE FOR H-20 LOADING.

USE XERXES FIBERGLASS 6'⌀ 4000 GALLON TANK FOR FEED/BACKWASH TANK.

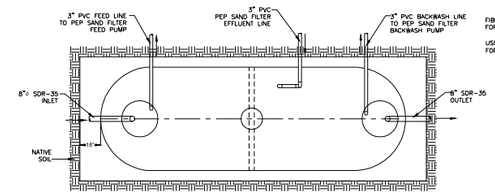

PLAN VIEW

FEED/BACKWASH TANK DETAIL
NOT TO SCALE

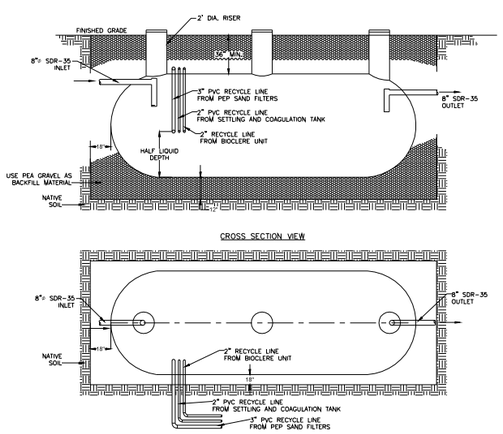

CROSS SECTION VIEW

PLAN VIEW

USE XERXES FIBERGLASS 10'⌀ 20000 GALLON TANK FOR PRIMARY SETTLING TANK.

PRIMARY SETTLING TANK DETAIL
NOT TO SCALE

LAWRENCE J. PAGGI, PE,PC
CONSULTING ENGINEERING
SUITE 205 PLAZA 9, 1070 U.S. ROUTE 9
FISHKILL, NEW YORK 12524
Civil, Sanitary & Site Engineering Site Planning Environmental Assessment

CROTON OVERLOOK
SAW MILL RIVER ROAD & DELL AVENUE
TOWN OF YORKTOWN, WESTCHESTER COUNTY, NEW YORK
SEWAGE TREATMENT FACILITY DETAILS

Revisions:

JOB NUMBER: 09-1111-15
DATE: SEPTEMBER 27, 2010
SCALE: NOTED

SHEET #
C6
6 OF 7